SMART CAMERA SENSORS

SMART CAMERA SENSOR FOR VISUAL INSPECTION AND IDENTIFICATION

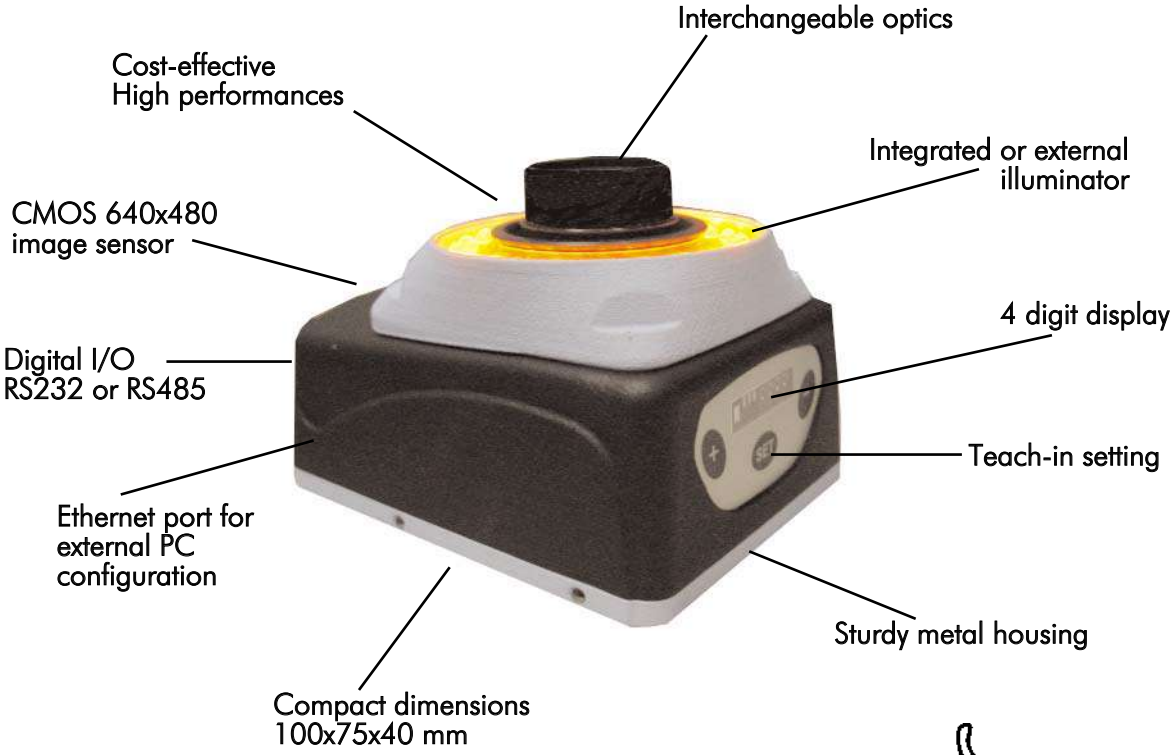

SCS1 leopard

The **SCS1** Smart Camera offers visual inspection and identification functionalities, with the simplicity, dimensions and prices of an advanced sensors.
Applications including multiple measurements, control of surfaces and object positions are successfully carried-out.
Furthermore, new **SCS1** models offer code OCR/OCV for optical character reading and verification, as well as 1D Barcode and 2D DataMatrix reading.
The illumination can be integrated or external; a complete range of illuminators is available as accessories, connectable by a standard M8 plug.
The sensor is a completely integrated device and can work in a stand-alone mode, without any external control.
The configuration is made through a Host PC via an Ethernet port, thanks to an user-friendly graphic interface supplied with the product. Otherwise, built-in keyboard and display allow the user to change directly sensor parameters and configuration.
Two PNP outputs activated according to the inspection, configurable inputs and RS232 or RS485 serial interfaces are present on the standard M12 connector. The standard CS or C-mount optics are interchangeable.

DATASENSOR
value through detection

SCS1 SMART CAMERA SENSORS

New **SCS1-ID** version offers standard inspection functionalities together with additional ID tools for Optical Character Recognition (OCR), Optical Character Verification (OCV), BarCode and DataMatrix reading.

SCS1 standard and **SCS1-ID** versions satisfy a broad range of applications (manufacturing, packaging, overprinting, food & beverage, cosmetic & pharmaceutical, electronic assembling, automotive, logistics, etc.) for:

- Quality inspection and surface control
- Object measurement and positioning
- Optical Character Recognition and Verification (OCR/OCV)
- 1D BarCode reading (Pharmacode-Code 32, Code 39, Code 128, 2/5 Interleaved)
- 2D DataMatrix reading (ECC 200)

DIMENSIONS

(version with integrated illuminator)

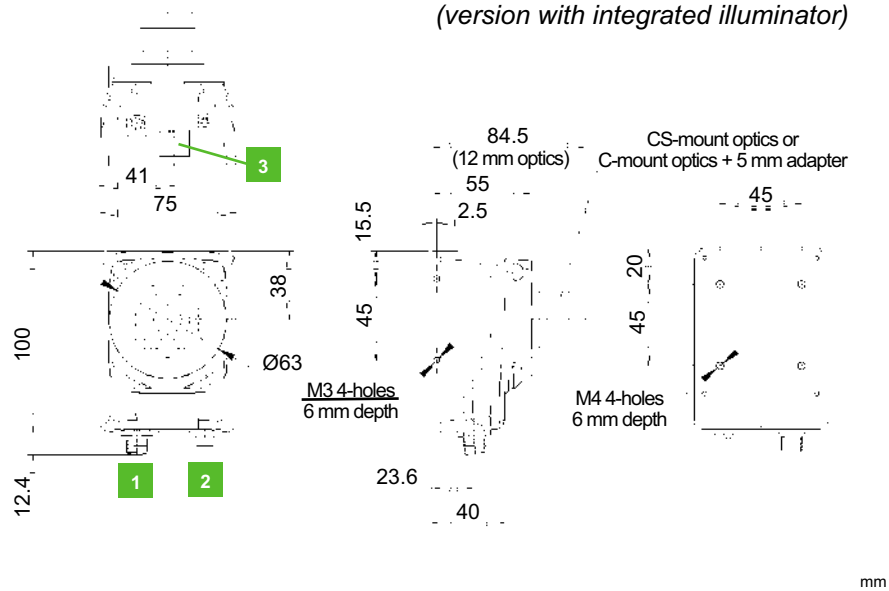

CONNECTOR LAYOUT

1. M12 8-pole I/O connector
2. M8 4-pole lighting connector
3. RJ45 Ethernet connector

INDICATORS AND SETTINGS

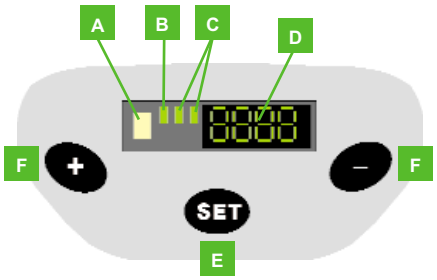

- A Output 1 status LED
- B Output 2 status LED
- C Digital inputs status
- D 4-digit display
- E SET push-button
- F +/- selection push-buttons

CONNECTIONS

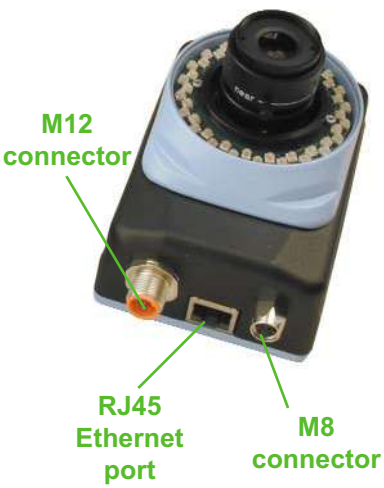

M12 8-POLE CONNECTOR

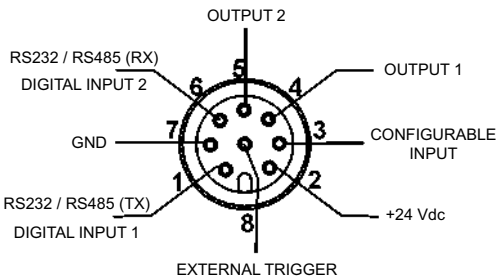

1	=	white	=	RS232 / RS485 (TX) / Digital input 1
2	=	brown	=	24 Vdc
3	=	green	=	Configurable input
4	=	yellow	=	Output 1
5	=	grey	=	Output 2
6	=	pink	=	RS232 / RS485 (RX) / Digital input 2
7	=	blue	=	GND
8	=	red	=	External trigger signal input

M8 4-POLE CONNECTOR

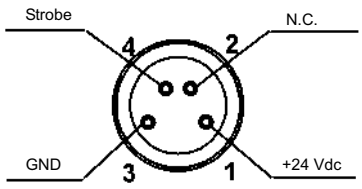

1	=	brown	=	+24 Vdc
2	=	white	=	Not connected
3	=	blue	=	GND
4	=	black	=	Strobe TTL signal

DATASENSOR

TECHNICAL DATA

Power supply:	24 Vdc ± 10% [1]
Ripple:	2 Vpp max
Consumption:	120 mA at 24 Vdc
Integrated illuminator:	ring illuminator, continuous red light
Output type:	2 PNP - NO
Output current:	100 mA max
Saturation voltage:	2 V
Serial interface:	RS232 version, (115200 baud rate)
	RS485 version, (115200 baud rate)
Digital inputs:	2 digital input version (0/24 Vdc)
Auxiliary input:	trigger signal
Network interface:	Ethernet 10/100 Mbs
Image sensor:	CMOS 6.61mmx4.97mm
	640x480 pixels resolution (VGA)
	9.9 µm pixel dimension
Lenses:	focal 12 mm CS-mount or C-mount with ring adapter
Shutter:	electronic global shutter
Acquisition time:	6 ms aprox. (full frame VGA 640x480)
Setting:	SET push-button
	+ and - push-buttons
	auxiliary PC graphic user interface supplied
Indicators:	4 digit display
	3 green LEDs
	1 yellow OUTPUT LED
Connections:	RJ45 Ethernet connection
	M12 8-pole I/O connector
	M8 4-pole external light connector
Electronic protection:	class 2
Mechanical protection:	IP40
Protection devices:	A, B [2]
Housing material:	Aluminium alloy
Weight:	300 g without illuminator
	385 g with integrated illuminator
Operating temperature:	-10 ... +55°C
Storage temperature:	-25 ... +70°C

TECHNICAL NOTES

[1] *Limit values*

[2] *A - reverse polarity protection*
B - overload and short-circuit protection

CE c UL us LISTED Ex II3D

LENS ADJUSTMENT

The lens presents two adjustments: one for diaphragm regulation (shutter) and the other for focus.

INSPECTION DIAGRAMS

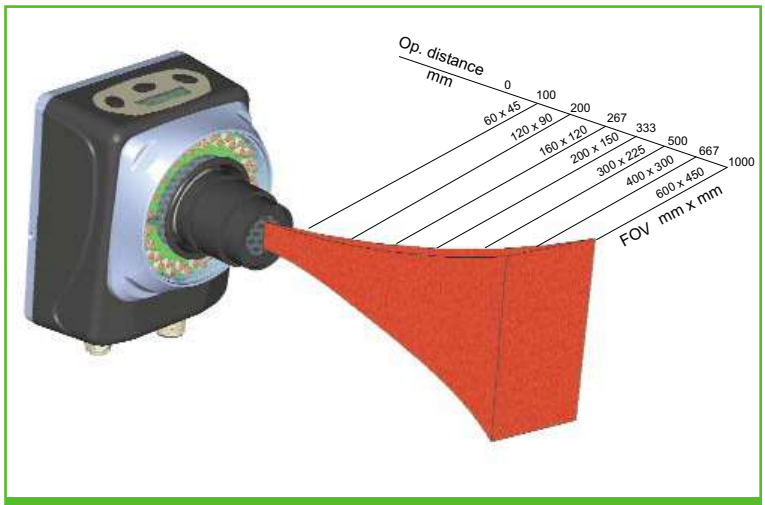

Operating distance - inspection area (FOV)
(12 mm optics)

DATASENSOR

USEasy™ PC GRAPHIC USER INTERFACE SETTING

A vision application is based on the comparison of the current image at the inspection point with a reference template.
The SCS1 is based on a CMOS image sensor, with 640x480 pixel resolution, which functions on a 256 level gray scale. The image elaboration tools exploit the information linked to each single pixel in order to verify that the inspection specificatios are respected.
The USEasyTM graphic interface configures the smart camera through PC in 4 simple steps which correspond to four operation modes. The SCS1 configuration is easy and intuitive: no specific machine vision knowledge is required. All users are guided graphically and can design directly on the image the tools necessary for the location, inspection, measurement and control of the required features, as well as identification tools.

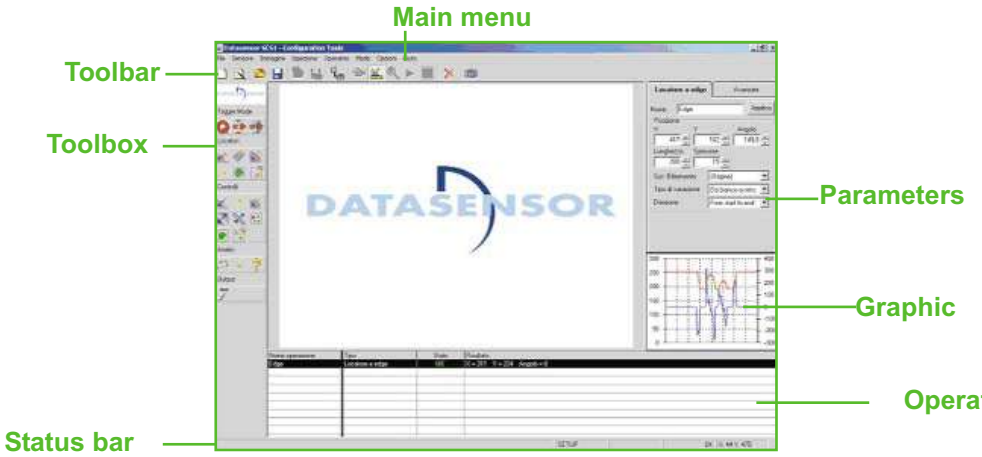

KEYBOARD SETTING

The menu options can be visualised using the + and - push-buttons, while SET is used to select an option and to open the relative submenu.

Setup: allows to access the parameters that control sensor functioning and inspection process;

Registers: visualises and modifies the numeric values of the tool parameters set using the PC interface in the 16 sensor registers.

Teach-in: self-detection process necessary to detect the target's reference image used as comparison during the successive inspection;

Save: allows to memorise inspection and automatically enter in the *Run mode*;

Network: allows to access communication parameters;

Display: allows to change text orientation on the display;

Start inspection: allows to return to the *Run mode*, resetting the previous configuration (quit without save);

Run inspection: sensor runs inspection.

INSPECTION TIME

The inspection time is the time period between the image acquisition and digital output activation, including the exposition, acquisition and elaboration time. The acquisition is approximately 6 ms for images with 640 x 480 pixel resolution, that can be reduced acquiring only a portion of the inspection field. The elaboration time depends on the number and type of tools used and image characteristics.

Measurement & Inspection Tools

Edge Detection
This tool detects the light intensity difference between adjacent pixels, identifying an edge of an object or part of it. In this manner, the linear distance between two references can be measured or the object angle position can be controlled.

Blob Analysis
Blob is the acronym of ‘Binary Large Object’ and identifies a homogeneous pixel area with light intensity included between predefined levels. This tool detects objects or surfaces that have the same Blob image, controlling the surface or counting the objects (Blob Count).

Contour Match
The Contour Match tool distinguishes objects comparing their contour with a reference template even if the object is rotated upto 360°. This 'all-in-one' tool guarantees good elaboration speed and detection precision.

Pattern Match
This tools recognises a reference according to the light intensity, converted on a 0-255 greyscale, of the different surface parts. The pattern recognition is the most precise inspection algorithm, but this tool requires the highest elaboration time.

The new SCS1-xxx-ID models, together with the aforementioned measurement and inspection tools, offer the following identification tools:

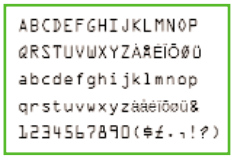

Optical Character Recognition
This tool is used to recognise characters (OCR) and converts them in an ASCII text, using a ‘learning’ procedure or pre-memorised character libraries. The device is thus able to ‘read’ printed characters, for example in Post Automation.

Optical Character Verification
The optical character verification (OCV) is used to control the quality of each character read. The printed quality and clearness can be controlled, such as the expiry date printed on food or beverage packaging.

Barcode reading
The device identifies the numeric and alphanumeric barcodes (sequence of dark lines and light spaces) the most diffused in the industrial automation, such as the 2/5 Interleaved (ITF), Code 39, Code 128 and Code 32 (Pharmacode).

Data Matrix reading
The device is able to read also bidimensional codes, such as Datamatrix in the most recent ECC200 version. The 2D code allows omnidirectional reading of miniature or partially damaged codes thanks to information redundancy.

ACCESSORIES

ST-5047 linear adjustable fixing bracket

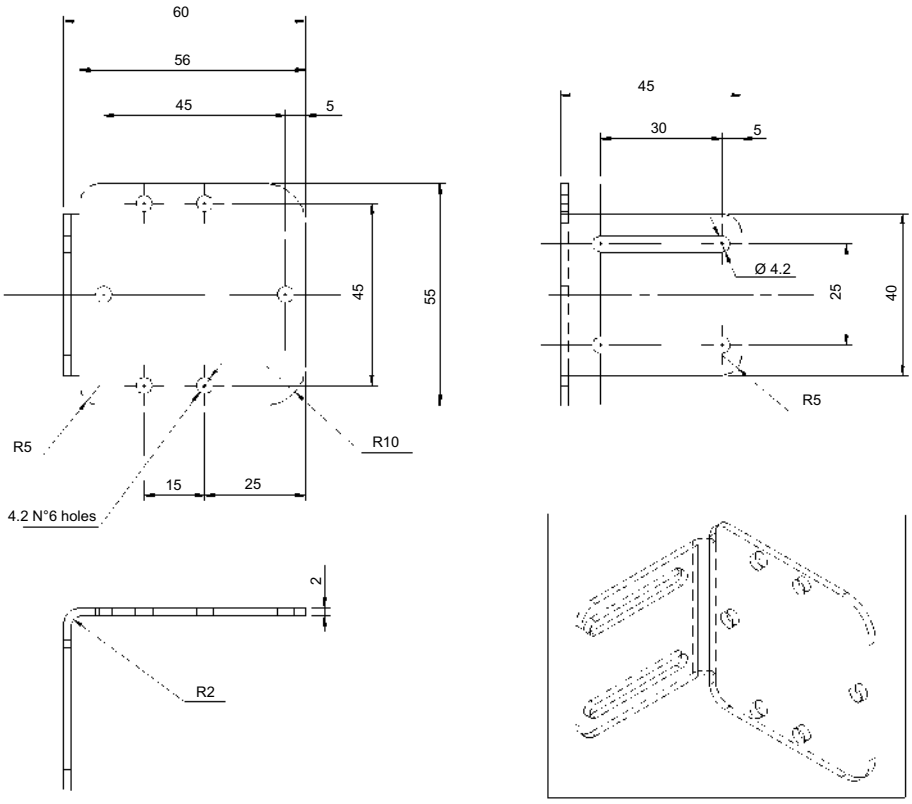

ST-5048 angled adjustable fixing bracket

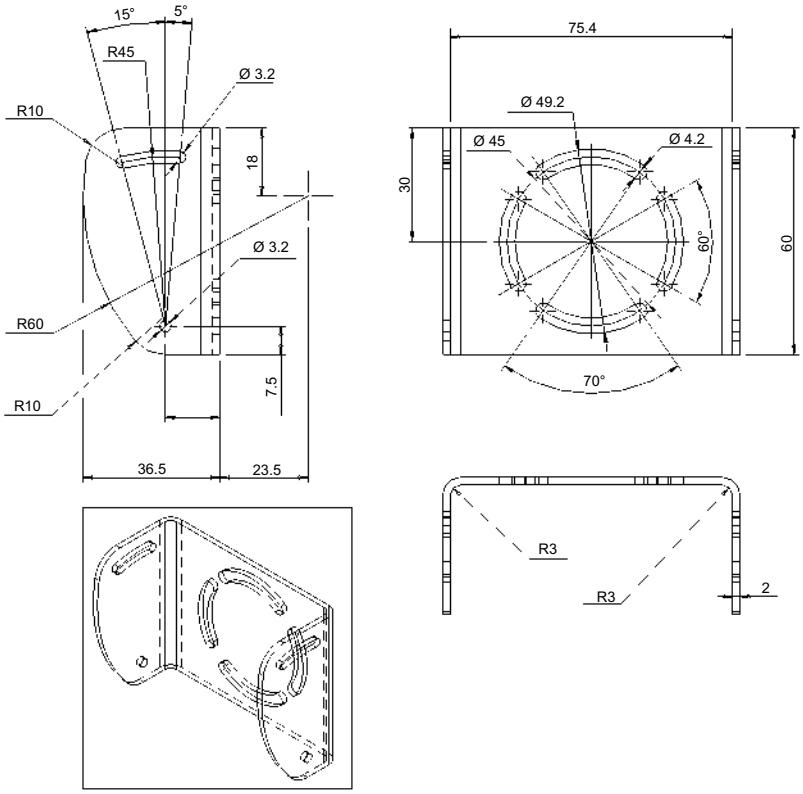

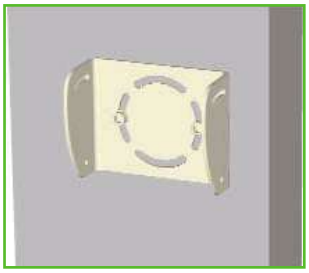

ILLUMINATORS

ILLUMINATION IN MACHINE VISION

Illumination has to be carefully studied to optimise the target object and background contrast in order to capture the image in the best possible way.
Hence lighting becomes fundamental as the object must be constantly illuminated to minimise ambient light effects and consequent changes.
Physical protections and shields can be used to avoid ambient light interferences on the object target, so that lighting brightness becomes less critical.
DATASENSOR offers different types of illuminators, in order to satisfy many different application needs.
Top, Back and Ring illuminators are available on request both in continuous and strobe versions.
Strobe lighting is a pulsed illumination source which uses LEDs that generate a short burst of high intensity light. It is very useful in presence of high-speed moving target objects as the image sensor exposure time becomes very low. Strobe lighting requires an external control module that is available in the accessory range.

SIL ILLUMINATOR SERIES

The **SCS1** Smart Camera offers a rich range of solid-state illuminators, thanks to the experience of **DATASENSOR OPTICS**, business unit specialised in the design, development and manufacturing of optic and lighting systems.
The illuminators of the **SIL** series are fully-integrated devices. The optics, electronics and LED driving section are all built-in the sturdy aluminium housing, easing installation and use.

Different versions are available:
- SIL LINE
- SIL AREA
- SIL BACK
- SIL RING
- SIL SPOT

Designed to provide low angle of incidence illumination over a long, wide area, the **SIL LINE** version produces a very high, non-diffused illumination.
The **SIL AREA** version present similar featurea and is thus recommended for large rectangular areas.
The **SIL RING** model represents an axial light source for general purpose applications and is available also in a strobed version for rapidly moving objects.
The **SIL BACK** model supplies rectangular backlight diffused illumination offering a clear contrast of the external contour and highlights all holes.
Object details are best underlined by the **SIL SPOT** version that concentrates high intensity illumination focussed on a limited area.
The electrical connection is eased thanks to M8 4-pole connectors.
Standard versions with red or white light emission are available, whereas blue, green or infrared versions can be made upon request.

Note: *please refer to the 'SIL industrial illuminator series' datasheet for more information relative to the specifications of the SIL illuminators .*

MODEL SELECTION AND ORDER INFORMATION

MODEL	INSPECTION	IDENTIFICATION	INTERFACE	ILLUMINATOR	ORDER N°
SCS1-12-PPZ2-ILR	•		RS232	integrated	959901000
SCS1-12-PPZ4-ILR	•		RS485	integrated	959901010
SCS1-12-PPHH-ILR	•		2 inputs	integrated	959901020
SCS1-12-PPZ2-NIL	•		RS232	external	959901030
SCS1-12-PPZ4-NIL	•		RS485	external	959901040
SCS1-12-PPHH-NIL	•		2 inputs	external	959901050
SCS1-12-PPZ2-ILR-ID	•	•	RS232	integrated	959901060
SCS1-12-PPZ4-ILR-ID	•	•	RS485	integrated	959901070
SCS1-12-PPHH-ILR-ID	•	•	2 inputs	integrated	959901080
SCS1-12-PPZ2-NIL-ID	•	•	RS232	external	959901090
SCS1-12-PPZ4-NIL-ID	•	•	RS485	external	959901100
SCS1-12-PPHH-NIL-ID	•	•	2 inputs	external	959901110

ACCESSORY SELECTION AND ORDER INFORMATION

MODEL	DESCRIPTION	ORDER N°
SIL-LINE RED FLOOD	Linear smart illuminator, red light with integrated LED driver	95A901180
SIL-AREA RED FLOOD	Rectangular smart illuminator, red light with integrated LED driver	95A901190
SIL-RING RED FLOOD	Ring smart illuminator, red light without integrated LED driver	95A901200
SIL-BACK RED	Backlight smart illuminator, red light without integrated LED driver	95A901210
SIL-SPOT RED FLOOD	Focussed smart illuminator, red light with integrated LED driver	95A901220
SIL-SPOT-NA RED FLOOD	Focussed smart illuminator, red light without integrated LED driver	95A901230
SIL-LINE WHITE FLOOD	Linear smart illuminator, white light with integrated LED driver	95A901260
SIL-AREA WHITE FLOOD	Rectangular smart illuminator, white light with integrated LED driver	95A901270
SIL-RING WHITE FLOOD	Ring smart illuminator, white light without integrated LED driver	95A901280
SIL-BACK WHITE	Backlight smart illuminator, white light without integrated LED driver	95A901290
SIL-SPOT WHITE FLOOD	Focussed smart illuminator, white light with integrated LED driver	95A901300
SIL-SPOT-NA WHITE FLOOD	Focussed smart illuminator, white light without integrated LED driver	95A901310
LD1	LED driver for SIL-SPOT-NA and SIL BACK	95A901240
LD2	LED driver for SIL-RING	95A901250
SCS-B1-02-G-01	1 m cable for illuminator, M8 4-pole connector	95A901070
SCS-CV-RJ45D-02	Ethernet cable direct 2 m *	95A901030
SCS-CV-RJ45C-03	Ethernet cable crossed 3 m **	95A901040
CS-A1-06-B-03	M12 8-pole connector with 3 m unshielded cable	95ACC2230
CS-A1-06-B-05	M12 8-pole connector with 5 m unshielded cable	95ACC2240
CS-A1-06-B-10	M12 8-pole connector with 10 m unshielded cable	95ACC2250
SCS-LE-V06-C-V	6 mm C-mount optics	95A901080
SCS-LE-V08-C-V	8 mm C-mount optics	95A901090
SCS-LE-V12-C-V	12 mm C-mount optics	95A901100
SCS-LE-V16-C-V	16 mm C-mount optics	95A901110
SCS-FILTER-620	optic filter 620 nm	95A901140
SCS-LASER POINTER	laser pointer for alignment	95A901050
SCS-ST5047	linear adjustable fixing bracket	95A901000
SCS-ST5048	angled adjustable fixing bracket	95A901020

* *direct Ethernet cable for SCS and LAN network connection*

** *crossed Ethernet cable for SCS and PC connection*

Distributed by:

HEADQUARTERS

DATASENSOR SpA
via Lavino, 265 - 40050 Monte San Pietro, BO - Italy
Tel. +39 051/6765611 • Fax +39 051/6759324
www.datasensor.com • e-mail info@datasensor.com

Datasensor SpA endeavours to continuously improve and renew its products; for this reason the technical data and contents of this catalogue may undergo variations without prior notice. For correct installation and use Datasensor SpA can guarantee only the data indicated in the instruction manual supplied with the products.

Printed in Italy in January 2006
Rev. 04